GKM Ultimate Tumbler Screener KTS

- **Modular, self-centering and expandable design**
- **Up to 7 separations simultaneously on each machine**
- **Slow speed and three-dimensional motion for optimal screening**
- **Delivered ready to operate and optimized for each product**
- **Up to 100% availability in 24h operation**
- **Low acceleration and low maintenance requirements, no product degradation**

Application

This screening machine is ideally suited to separate and dedust dry, powdered and granular products.
Particularly suitable for high feed rates and multideck separations of fine, lightweight and difficult to screen products.

Main Benefits include:

- Modular, self-centering and expandable design
- Up to 7 separations simultaneously on each machine
- Slow speed and three-dimensional motion for optimal screening
- Delivered ready to operate and optimized for each product (Plug & Play)
- Up to 100% availability in 24 h operation
- Low acceleration and low maintenance requirements, no product degradation
- Dustproof, CE compliant, FDA approved rubber and plastic materials
- Stainless steel 1.4301 intermediate rings and screen frame are standard
- Very competitively priced with short delivery times

Functions

- Self-centered screen inserts
  (KTS-2400 Screens are made of two pieces)
- Dust-proof click-on system
- Statically and dynamically balanced for vibration-free installation in steel structures
- Simple fine-tuning with deflector

Options

- Patented pneumatic deck lifters/spanners
- Patented manual deck lifters
- Quick clamps for easy and fast screen exchange
- ATEX certified

Datasheet

Particle feed sizes:	1 µm – 20 mm
Feed rates:	1 kg/h – 50.000 kg/h
Bulk densities:	20 – 10.000 g/l
Mesh openings:	20 µm – 20 mm
Screens usable:	Stainless steel, plastic woven mesh cloth or perforated plates
No. of screen decks:	1 – 6 per machine
Anti-blinding systems:	Rubber balls, Ultrasonic, rotating air nozzles, rotating roller brushes; combinations available upon request
Speed range:	180 – 280 min –1
Screen movement:	Three-dimensional, set to product
Acceleration:	1.3 – 1.8 g / 60 – 80 mm horizontal und 5 – 40 mm vertical
Materials:	Carbon steel, stainless and special steels, rubber materials FDA compliant
Surfaces:	Painted, brushed or ground, mirror or electro polished for food and pharmaceutical products with a surface roughness of < 0.4 microns

Dimensions

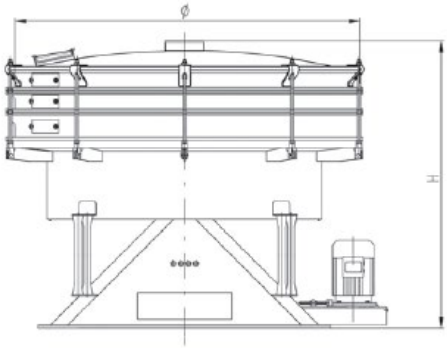

Model Sizes KTS	600	1000	1200	1600	2000	2400	2600
Screening are (m²)	0.292	0.785	1.13	1.83	2.63	4.52	5.31
Diameter (mm) Ø	660	1010	1250	1580	1880	2450	2650
Motor Power (kW)	0.25	1.50	2.20	4.00	4.00	5.50	5.50/7.50
Weight (kg)	280 – 300	750 - 950	900 - 1100	1280 – 1400	1300 - 1600	2400 - 2800	2500 - 2900
1 Deck (Height mm) H	811	936	1262	1291	1411	1584	1596
2 Decks (Height mm) H	926	1048	1375	1404	1524	1697	1707
3 Decks (Height mm) H	1041	1159	1488	1517	1637	1810	1820
4 Decks (Height mm) H	1140	1271	1601	1632	1750	1923	1933
5 Decks (Height mm) H	1271	1383	1714	1743	1864	2036	2046
6 Decks (Height mm) H	1386	1495	1827	1856	1977	2149	2159

Kemutec - Part of Schenck Process
Rupert House
London Road South
Poynton, Cheshire
SK12 1PQ
United Kingdom

All information is given without obligation. All specifications are subject to change. © by Schenck Process Europe GmbH, 2021